HOW TO ORDER

EXAMPLE FILTER ASSEMBLY

G	81	4F	-	3M	D	S
A				B	C	D

EXAMPLE ELEMENT ASSEMBLY

81E	-	1PM	F	S	*
		B	C	D	

*** Add GS for water removal screen**

A

HOUSING MATERIAL	
G	316 SS 5,000-PSI
P	17-4 PH 10,000-PSI

B

MICRON RATING

CODE	NOM.	ABS	C	M	PM	W
1PM	0.2	0.5			x	
1M	N/A	1		x		
2PM	0.5	1			x	
3M	N/A	3		x		
3PM	1	3			x	
4PM	3	5			x	
6M	N/A	6		x		
10W	2	10				x
3C	3	10	x			
12M	N/A	12		x		
18W	5	18				x
10C	10	25	x			
25M	N/A	25		x		
25W	10	25				x
75W	40	75				x
100W	75	100				x
200W	100	200				x

C = Cellulose
M = Microglass
PM = 316 Sintered Metal
W = 304 Woven Wire Mesh

C

COLLAPSE RATING	
CODE	DESCRIPTION
A	Cellulose 150-PSI
B	Cellulose 300-PSI
C	Microglass 300-PSI
D	Microglass 3,250-PSI
E	304 Wire Mesh 4,5000-PSI
F	316 Sintered 2,000-PSI

D

O-RING SPECIFICATIONS

CODE	MATERIAL	TEMPERATURES
N**	Nitrile(Buna)	-40º to 250ºF
V**	Viton®	-20º to 400ºF
E	Ethylene Propylene	-60º to 300ºF
T	Teflon®	-320˚ to 450˚F
K	Kalrez®	-40º to 550ºF
S	Teflon Encapsulated Viton Core	-10º to 300ºF

**for 90- durometer add 9 to code (example: V9)
®DuPont

Specifications

Housing	G	P
Material	316 SS	17-4PH
Operating (psi)	5,000	10,000
Proof (psi)	7,500	15,000
Burst (psi)	20,000	40,000
Weight (lbs.)	2.5	2.5
Port Size	1/4 NPT	1/4 NPT

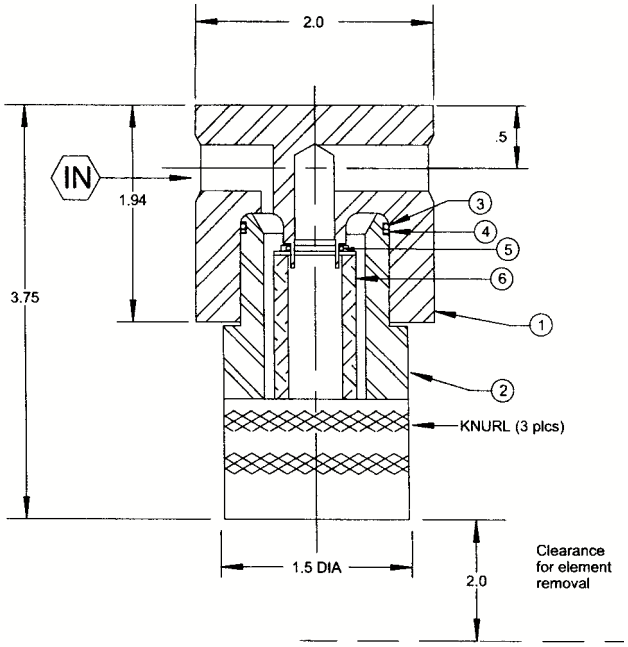

Consult Factory on use of Teflon Over 6,000 - PSI

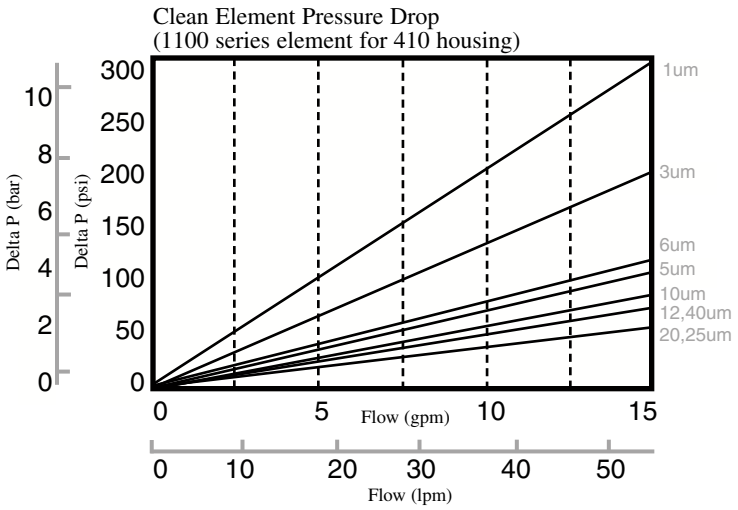

3B FILTERS INC.
4642 West 92nd Street
Oak Lawn, IL 60453
Phone (708) 636-6240
Toll Free 866-3BFILTERS (323-4583)
Fax (708) 636-6251
sales@3bfilters.com